Installation Specifications for 45H & 47H Mortise Locks

Template Number: H16
Series: 45H & 47H
Backset: 2 3/4"
Trimstyle: H, J, M, N, R, S
Door Thickness: 1 3/4" to 5"

BEST
dormakaba Group

Notes

1. Before drilling, check the *H15 Template—Installation Template for 45H & 47H Mortise Locks and 45HW & 47HW Electrified Mortise Locks*(T81163).
2. The maximum door-to-frame gap is 3/16 in.(4.8 mm).
3. Allow 3/64 in. (1.2 mm) clearance for the stike box thickness.
4. For metal doors, lock case support is required from the door manufacturer.
5. Tap for a #12-24 machine screw or drill for a #12 wood screw (a combination screw is supplied).
6. **Lock case holes**:
   - **C** **Cylinder hole**— For 45H Locks, 1 1/4 in. (32 mm) dia. For 47H Locks, 1 3/4 in. (45 mm) dia.
   - **F** **Emergency key / thumb turn access hole**—1/2 in. (13 mm) dia.
   - **G** **Trim mounting hole** — 3/8 in. (10 mm) dia. (two required)
   - **H** **Lever hole**—7/8 in. (23 mm) dia.

Strike plate — overhead view

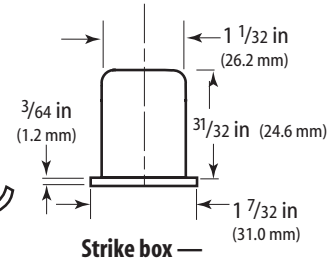

Strike box — overhead view

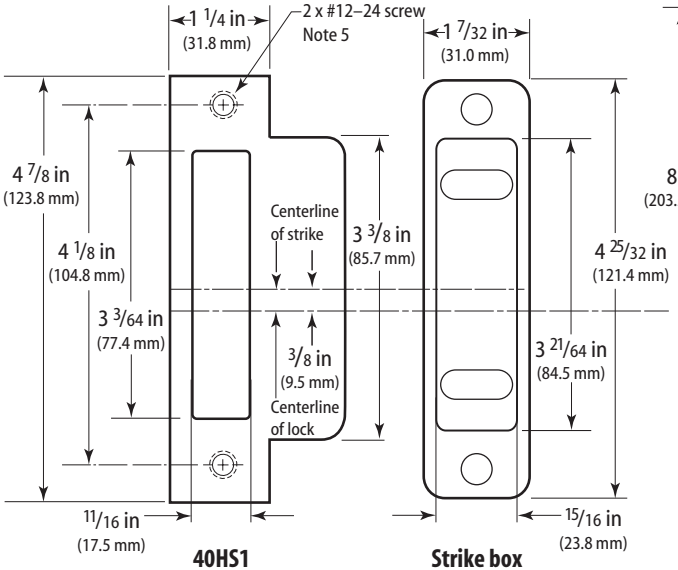

40HS1 Strike plate

Strike box

DO NOTE SCALE

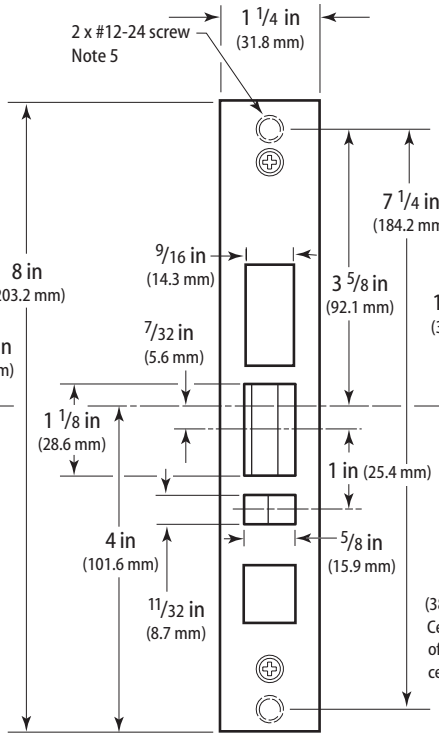

Faceplate

Mortise case — overhead view

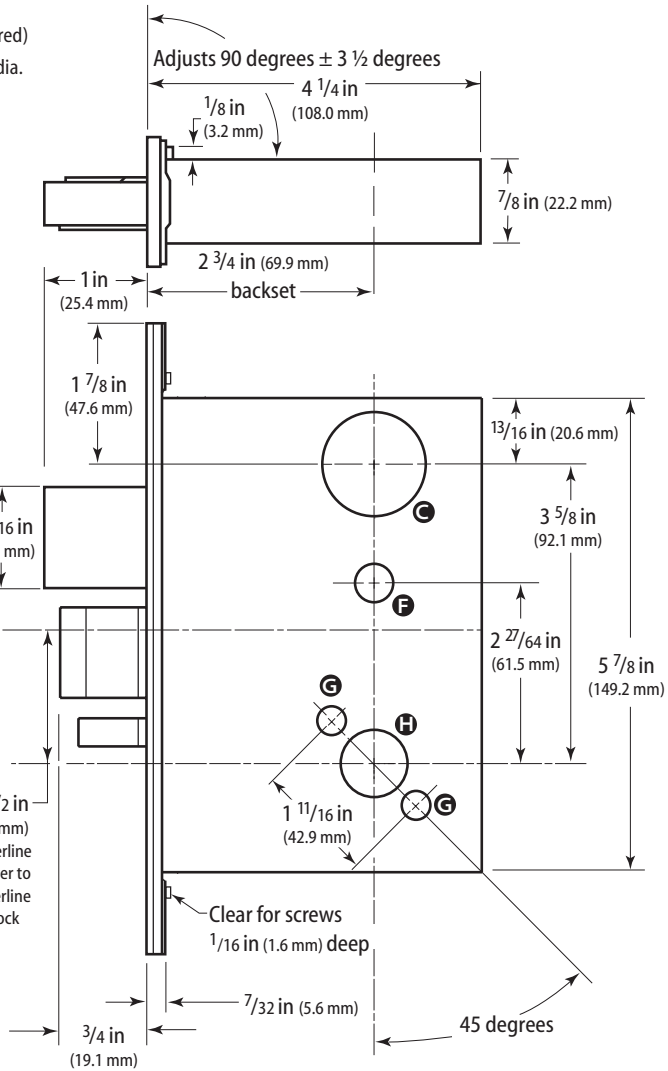

Mortise case — side view

BEST is a trademark of dormakaba USA Inc. ©2021 All rights reserved.