Installation Specifications for 1W7J2 Switch Locks

Template Number: W10
Series: 1W
***Not to scale 1:1. Measurements are for reference only. Not a drilling template.**

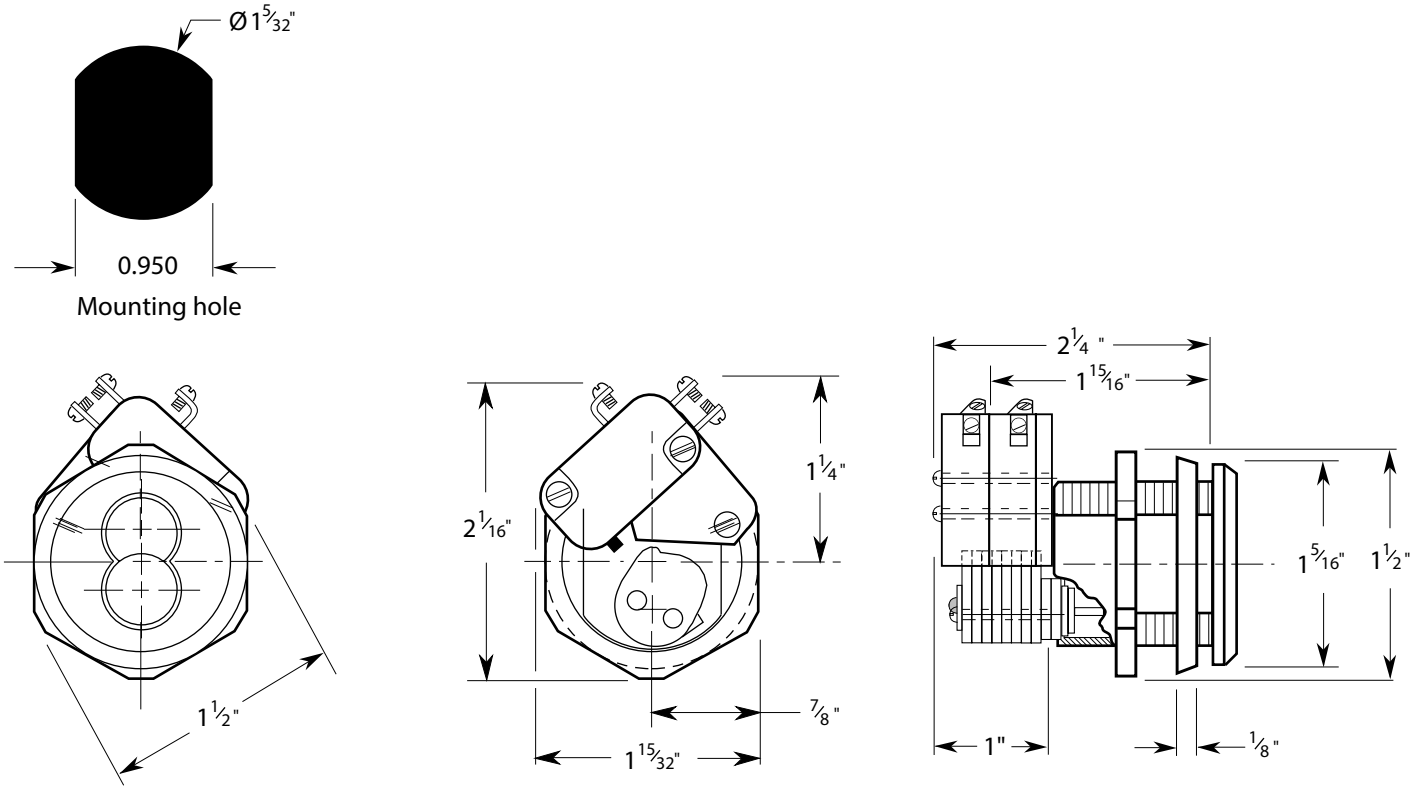

BEST is a trademark of dormakaba USA Inc. ©2021 All rights reserved.