662HD - ALUMINUM GEARED HINGE, 3/32" INSET, FULL CONCEALED

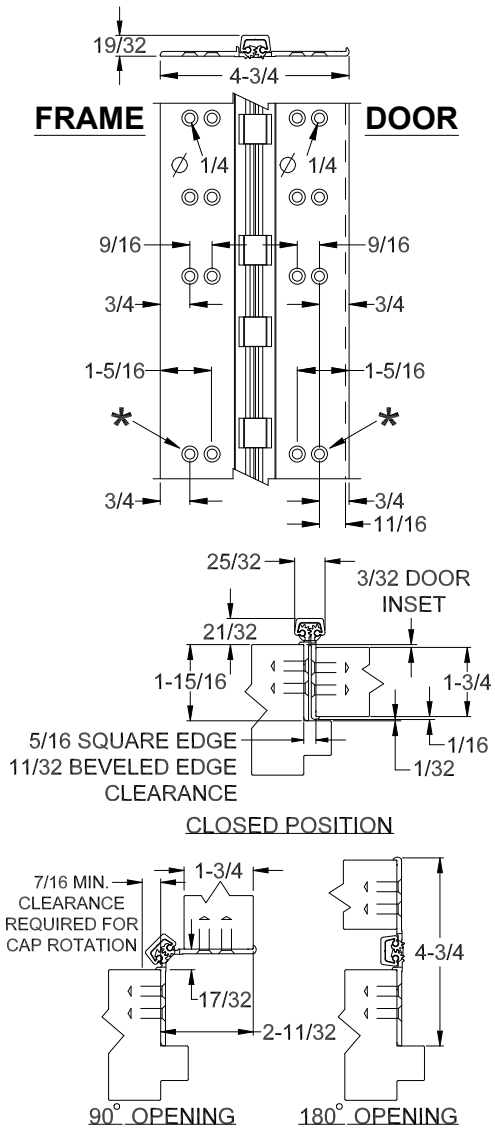

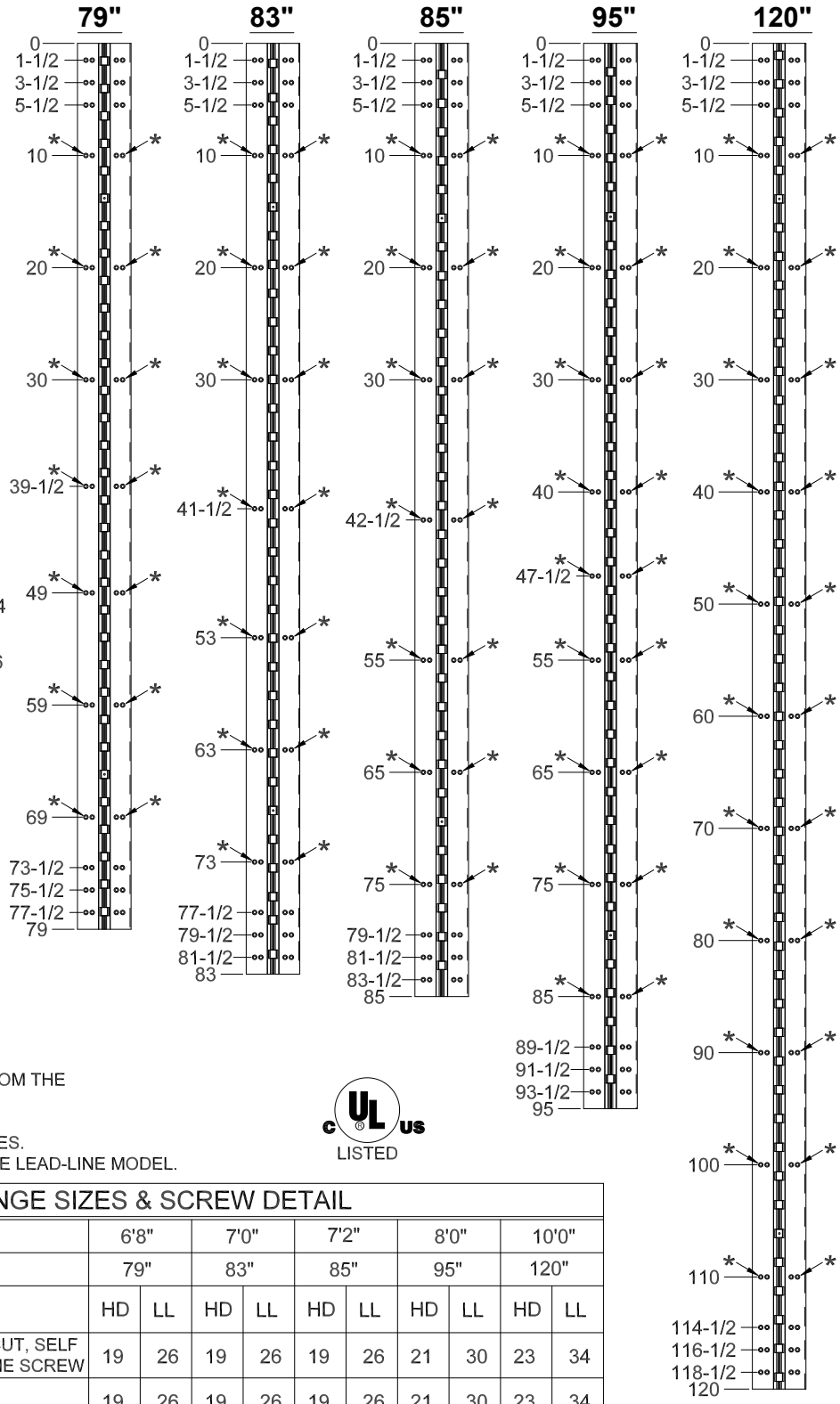

NOTES:
1. HINGES CUT TO CUSTOM LENGTH ARE CUT FROM THE BOTTOM. PLEASE SPECIFY HANDING.
2. ALL DIMENSIONS ARE IN INCHES.
3. ALL DIMENSIONS ARE TO CENTERLINE OF HOLES.
4. * = DENOTES EXTRA MOUNTING HOLE FOR THE LEAD-LINE MODEL.

c UL us LISTED

STANDARD HINGE SIZES & SCREW DETAIL

NOMINAL DOOR HEIGHT		6'8"		7'0"		7'2"		8'0"		10'0"	
ACTUAL HINGE LENGTH		79"		83"		85"		95"		120"	
		HD	LL	HD	LL	HD	LL	HD	LL	HD	LL
FRAME	12-24 x 7/8" PHILLIPS FLAT HEAD, UNDERCUT, SELF DRILLING, THREAD FORMING TEK MACHINE SCREW	19	26	19	26	19	26	21	30	23	34
DOOR	12-24 X 7/8" PH. F.H. UNDERCUT SELF DRILLING THREAD FORMING TEK SCREW	19	26	19	26	19	26	21	30	23	34

BEST

dormakaba USA Inc.
6161 East 75th Street
Indianapolis, IN 46250 USA
Customer Service: 1-800-392-5209

https://dhwsupport.dormakaba.com/hc/en-us

BEST is a trademark of dormakaba USA Inc. ©2021 All rights reserved.