Always consult DORMA's web site for latest template at www.dorma-usa.com or call 1-800-523-8483.

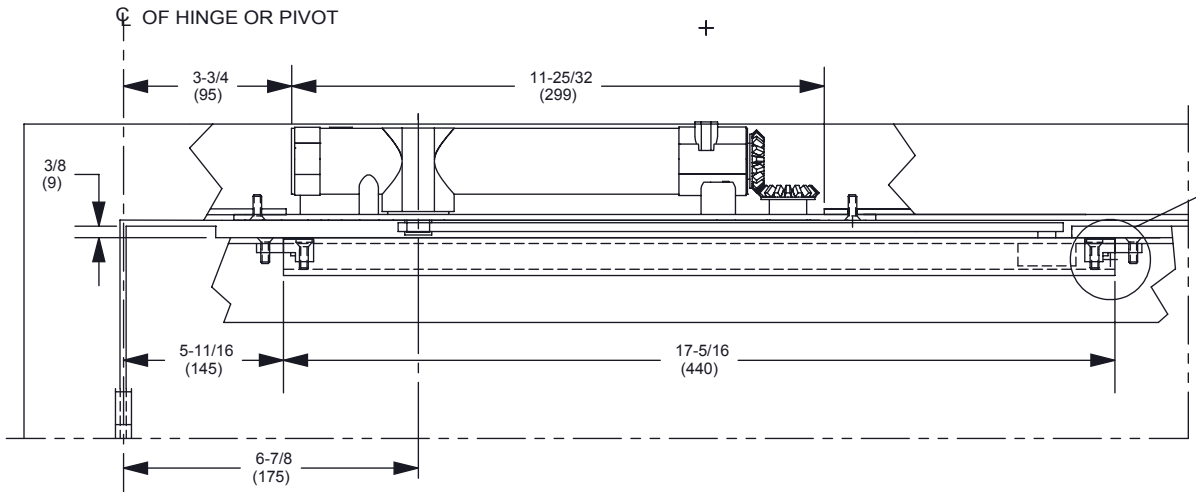

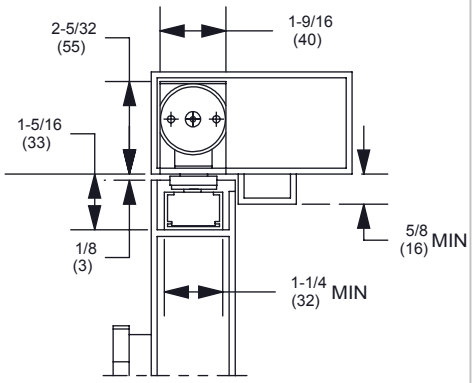

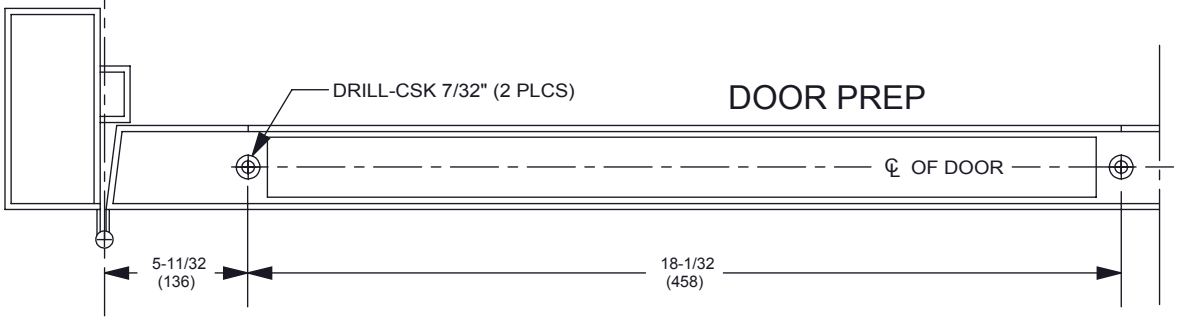

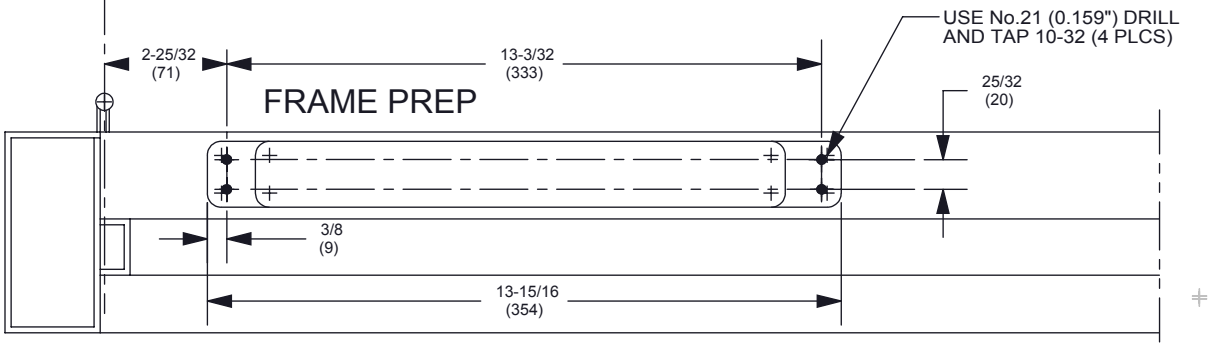

NOTES:

1. DO NOT SCALE DRAWING.
2. DIMENSIONS ARE IN INCHES/(MM).
3. RIGHT HAND DOOR SHOWN.
4. HOLD OPEN RANGE 80°-120°.
5. DOOR HUNG ON 4-1/2" X 4-1/2" BUTT HINGES OR 3/4" OFFSET PIVOTS- LESS TOP PIVOT.
6. THE TEMPLATING SHOWS THE LOCATION OF THE TRACK/CLOSER. NECESSARY REINFORCEMENT BY OTHERS.
7. THE ITS 96 MAY BE USED ON U.L. LISTED METAL DOORS AND FRAMES SUPPLIED BY MANUFACTURERS WHO HAVE THE PREPARATION FOR THIS CLOSER INCLUDED IN THEIR U.L. PROCEDURE. CHECK WITH THE DOOR/FRAME MANUFACTURER TO CONFIRM THAT ITS 96 PREPARATION IS INCLUDED.
8. 5/8" MAXIMUM BETWEEN ℄ OF CLOSER AND ℄ OF TRACK.
9. SEE BROCHURE FOR MAXIMUM DOOR WIDTH.
10. MAXIMUM OPENING APPROX. 130°

DOOR CLOSER MODEL: ITS9625

CLOSER IN FRAME, TRACK IN DOOR

WITH ACCESSORY TRACK BRACKETS

(METAL DOOR AND FRAME)

DORMA Architectural Hardware
Reamstown, PA 17567