# Door Closer Models: SL6014, SL6036 S-IS & S-ISH (Dead Stop Arm)
# Regular Installation (Pull Side Mount)
# Drilling Instructions

BEST
dormakaba Group

For online instructions, assistance or warranty information:
Call 1-800-392-5209 or visit https://dhwsupport.dormakaba.com/hc/en-us

NOTES:
1. DO NOT SCALE DRAWING.
2. RIGHT HAND DOOR SHOWN.
3. DIMENSIONS ARE IN INCHES/(MM).
4. CAUTION: SEX NUTS ARE REQUIRED FOR ATTACHMENT OF COMPONENTS TO UNREINFORCED DOORS AND TO WOOD OR PLASTIC FACED COMPOSITE TYPE FIRE DOORS, UNLESS AN ALTERNATIVE METHOD IS IDENTIFIED IN THE INDIVIDUAL DOOR MANUFACTURER'S LISTINGS.
5. DPK FASTENERS FOR STEEL DOOR & FRAME ONLY.

| DEGREE OF DEAD STOP | DIM. "A" CLOSER | DIM. "B" ARM SHOE |
|---|---|---|
| 85° | 9-3/8" (238) | 12-1/4" (311) |
| 90° | 8-7/8" (225) | 11-3/4" (298) |
| 100° | 7-7/8" (200) | 10-3/4" (273) |
| 110° | 7-1/8" (181) | 10" (254) |

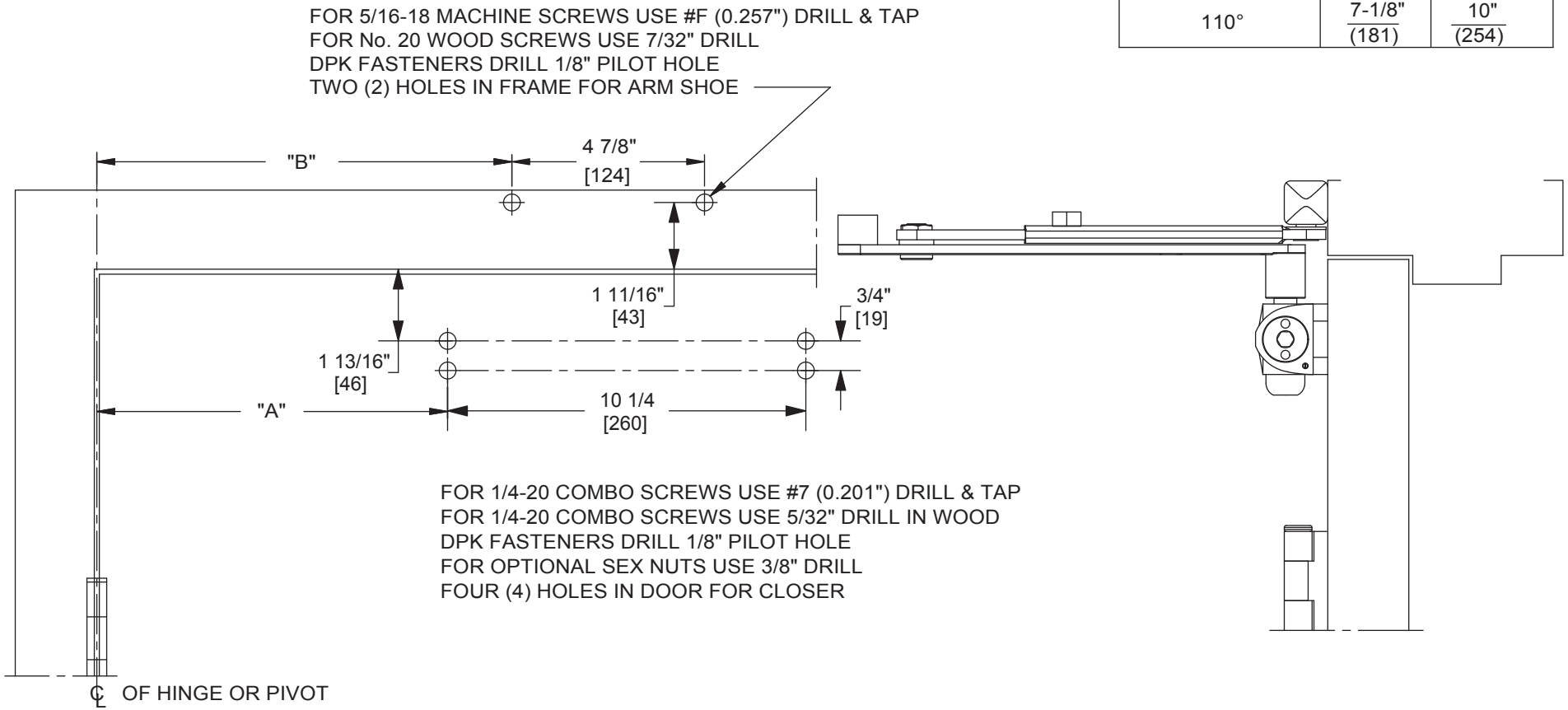


BEST is a trademark of dormakaba USA Inc. ©2021 All rights reserved.

Not to scale 1:1. Measurements are for reference only. Not a drilling template.

T92289_A